CAST IRON HORIZONTAL LIFT CHECK VALVE

INTRODUCTION

Leader Horizontal Lift Check valves are designed with high sensitivity to pressure so that the valve closes immediately before significant fluid starts flowing backward. Fluid reversing backward causes damage to equipment like boilers or pumps. The valve is activated by the flowing material in the pipeline. The pressure of the fluid passing through the system opens the valve disc, while any reversal of flow will close the valve disc. Closure is accomplished by the weight of the check mechanism, by back pressure. Disc guides enhance the proper alignment of the disc and seat configuration when the disc closes. Entirely automatic in action, depending upon differential pressure and velocity of flow within the line to perform their functions of opening and closing.

PRINCIPAL FEATURES

- Design Std.: DIN EN 12334.
- Bolted Cover, Piston type Disc design.
- Metal to Metal seating.
- Stainless Steel Body & Disc rings.
- Rigid & Sturdy design.
- Long service life as wear is minimal which makes it highly reliable.
- Valve is mechanically automatic and thus it does not need an actuator or valve operator.
- Suitable for only horizontal installation.
- The valve must be installed in the direction of the flow arrow.
- Flanged ends as per DIN EN 2533 PN-16 R.F.
- Valves are available with IBR Certification upto size 200mm.
- Widely applied for low-pressure and ambient-temperature utility services such as water supply, power plants, gas supply, district heating piping, irrigation projects, air conditioning systems, as well as food processing industry, chemical and petrochemical industry, Boiler industry, pharmaceutical and powder industry to prevent the back flow.

Item Code:	CI0019
Pressure Rating:	PN-16
Testing Standard:	BSEN 12266 Part-1
Size Range:	15mm to 300mm
Product Standard:	DIN EN 12334

END CONNECTION

Flanged ends as per DIN EN 2533 PN-16 R.F.
Flange drilling as per other standards also available upon request.

UTILISATION & SERVICE

"LEADER" Cast Iron Swing Check valves are suitable for above-ground installations.
Best suited for potable water, treated fresh water, neutral liquids Steam & some gases.

WORKING PRESSURE

Maximum Working Pressure: 16 Bar.
See Pressure / Temperature Diagram.

TEMPERATURE LIMITS

Maximum Working temperature: 220ºC.
See Pressure / Temperature Diagram.

SUITABLE FOR

Water	Oil	Air (#)	Gases	Steam
✓	✓	✓	✓	✓

(#) Recommended with soft seating for tight sealing

TEST PRESSURE (Hydrostatic)

Rating	PN-16
Body (Hyd.)	24 Bar
Seat (Hyd.)	16 Bar

PRESSURE/TEMPERATURE DIAGRAM

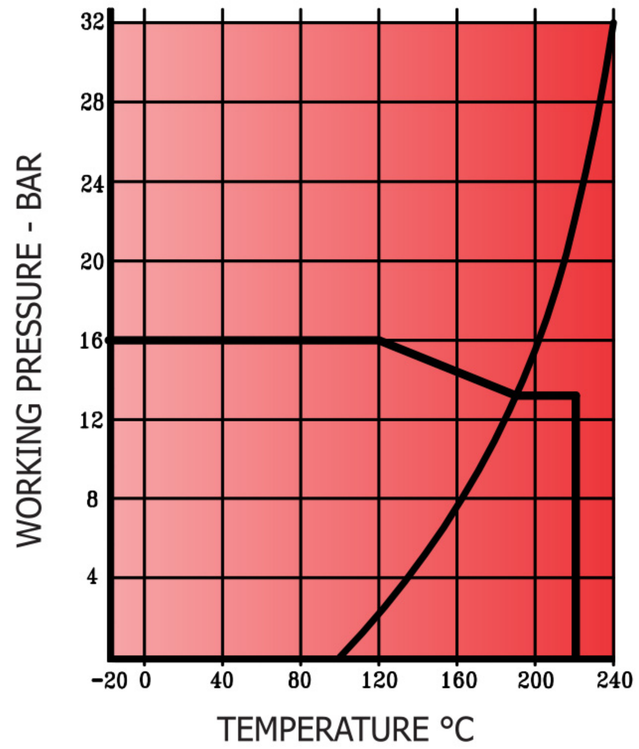

Note : The above data is subject to change without notice due to our continuing product improvement program.

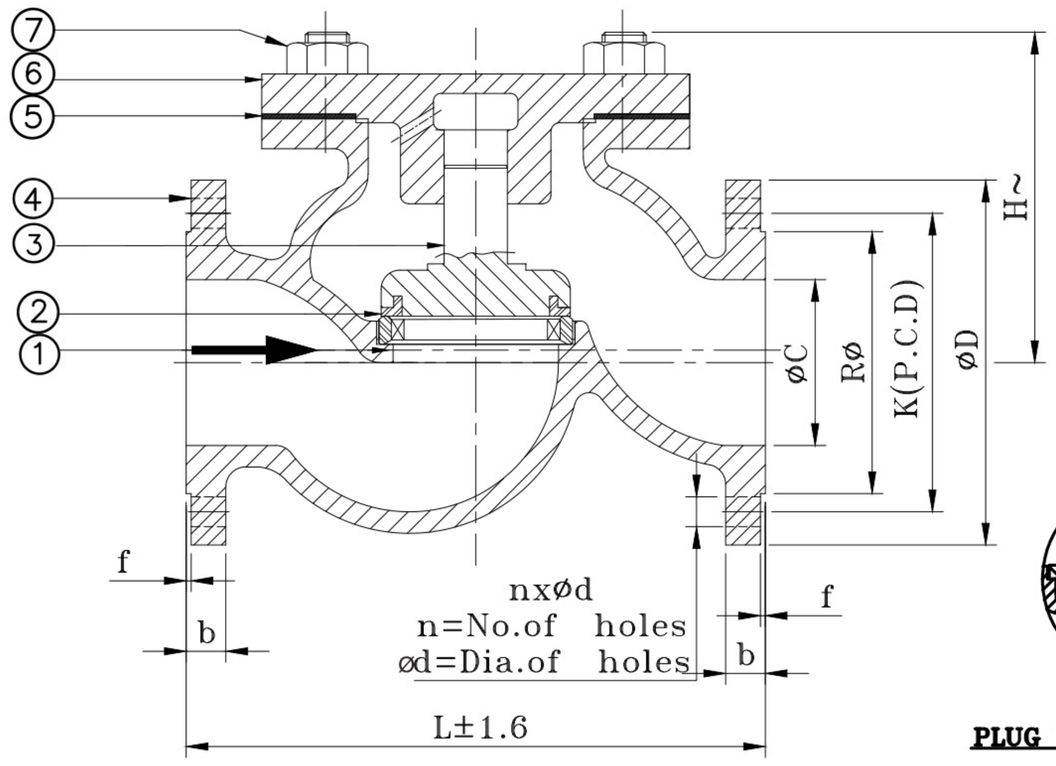

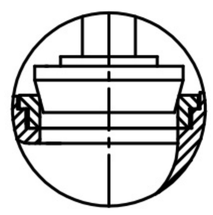

PLUG TYPE DISC DESIGN

MATERIAL SPECIFICATION

P.No.	NAME OF PART	MATERIAL	SPECIFICATION
1	BODY SEAT RING	F.S.S.	ASTM A182 Gr. F6a
2	DISC RING	F.S.S.	ASTM A182 Gr. F6a
3	DISC	CAST IRON	IS 210 Gr. FG200
4	BODY	CAST IRON	IS 210 Gr. FG200
5	GASKET	C.N.A.F.	–
6	COVER	CAST IRON	IS 210 Gr. FG200
7	STUDS & NUTS FOR BODY & COVER	CARBON STEEL	–

DIMENSIONAL DATA

SIZE (mm)	15	20	25	32	40	50	65	80	100	125	150	200	250	300
L ±1.6	130	150	160	180	200	230	290	310	350	400	480	600	730	850 ±3.2
H~	85	85	90	100	115	130	160	170	190	210	282	310	325	380
ØC	15	20	25	32	40	50	65	80	100	125	150	200	250	300
ØD	95	105	115	140	150	165	185	200	220	250	285	340	395	445
b	14	16	16	18	18	20	20	22	24	26	26	26	28	28
RØ	45	58	68	78	88	102	122	138	158	188	212	268	320	370
f	2	2	2	2	3	3	3	3	3	3	3	3	3	4
K	65	75	85	100	110	125	145	160	180	210	240	295	350	400
n	4	4	4	4	4	4	4	8	8	8	8	8	12	12
d	14	14	14	18	18	18	18	18	18	18	23	23	23	23

Note : The above data is subject to change without notice due to our continuing product improvement program.