CAST IRON DUAL PLATE CHECK VALVE (WAFER)

INTRODUCTION

Leader Dual Plate Check Valves are automatic, quick-acting valve designed to prevent the reversal of flow in a piping system. The two valve discs, eccentrically embedded, have springs which force the valve to close in case no pressure is available. The pressure of the fluid passing through the system opens the valve discs, while any reversal of flow will close the valve discs. Closure is accomplished by the spring action and by back pressure.

PRINCIPAL FEATURES

- Design Standard: API 594.
- Retainer-less Construction ensures that they do not drill entirely into the valve body to allow the hinge-pin and the stop-pin to be fitted with a dual-plate check valve. The feature ensures high integrity & tamper-proof design, ensures no leakage from the body.
- Wafer type design, to take lesser space than the Reflux / Swing Check Valve.
- Being light in weight, has more rugged construction than the standard Swing Type Check Valve, which needs expensive foundation and special supports.
- Less wear and tear of seat surface due to resilient integrally moulded body seating face.
- Stopper pin prevents the discs from coming into contact with each other and thus prevents disc damage. The stopper pin also prevents spring failure by ensuring that the discs don't travel beyond the full-open position.
- Low cracking pressure design (operable at low pressures).
- Independent spring design feature also available which gives less scrubbing of disc & independents movement of discs.
- Inherently non-slamming, no external devices / attachment required.
- Water hammering effect is minimized in this design, since the closing of valve does not depend upon any back pressure or flow.
- Either vertically (only upwards) or horizontally installed.
- Lifting eyebolt option is provided.

Item Code:	CI0085,	CI085B
Disc:	Ductile Iron,	SS(CF8)
Pressure Rating:	PN-16	
Testing Standard:	API 598	
Size Range:	40mm to 900mm	
Product Standard:	API 594	

SUITABLE FOR

Water	Oil	Air	Gases	Steam
✓		✓		

TEST PRESSURE (Hydrostatic)

Rating	PN-16
Body (Hyd.)	24 Bar
Seat (Hyd.)	17.6 Bar

END CONNECTION

Wafer type Suitable for clamping between flanges as per ANSI B16.1 Class-125 / ASME B16.5 Class-150 / IS 6392. Suitability for insertion between other flange standards also available upon request.

UTILISATION & SERVICE

Best suited for water, HVAC, fire-fighting, compressed air application.

WORKING PRESSURE & TEMPERATURE LIMITS

Maximum Working Pressure: 16 Bar.
Maximum Working temperature: 120°C.
See Pressure / Temperature Diagram.

PRESSURE/TEMPERATURE DIAGRAM

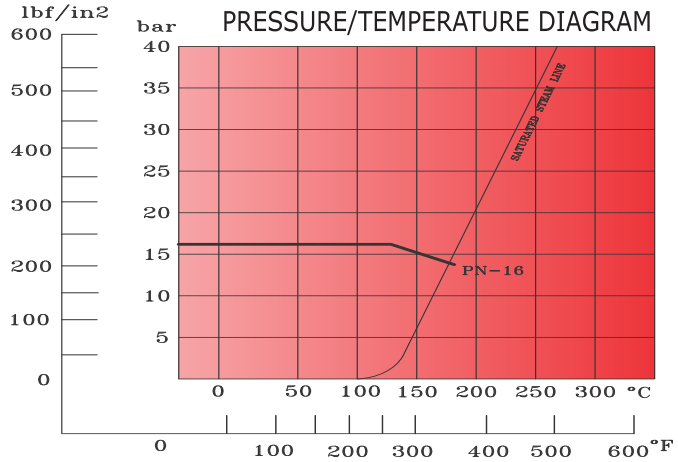

Note : The above data is subject to change without notice due to our continuing product improvement program.

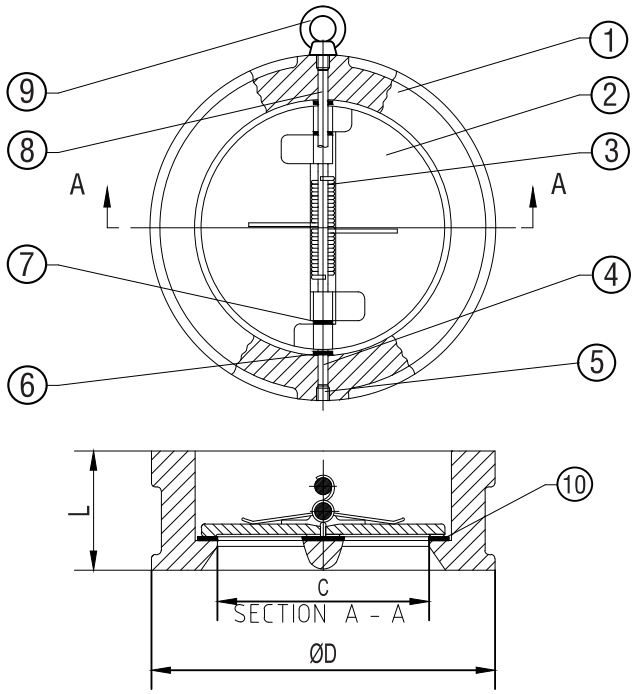

Design for size upto 250mm

MATERIAL SPECIFICATION

P.No.	NAME OF PART	MATERIAL	SPECIFICATION
1	BODY	C.I.	BSEN 1561 GJL200
2	DISC	D.I. / S.S.	ASTM 536 Gr. 60-40-18 / ASTM A351 Gr. CF8
3	SPRING	S.S. 316	
4	HINGE PIN	S.S. 416	
5	PLUG	CARBON STEEL	
6	BODY BEARING	PTFE	
7	SPRING BEARING	PTFE	
8	STOP PIN	S.S. 416	
9	EYE BOLT	CARBON STEEL	
10	BODY SEAT	EPDM	

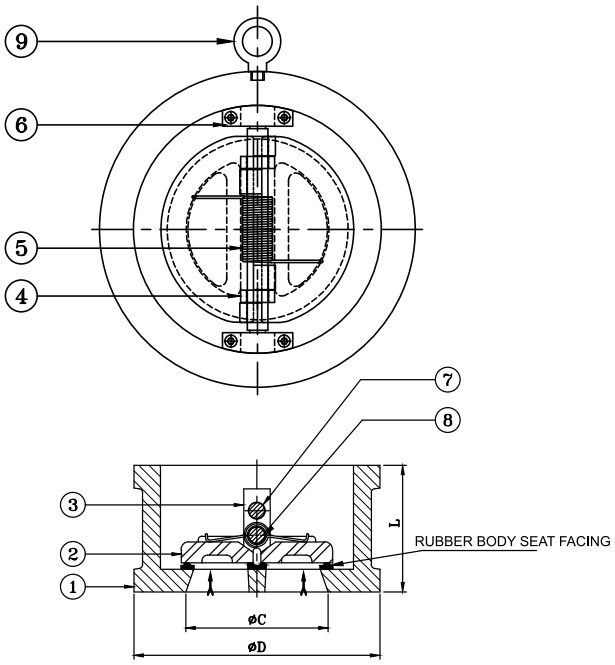

Design for size 300mm and above

MATERIAL SPECIFICATION

P.No.	NAME OF PART	MATERIAL	SPECIFICATION
1	BODY	C.I.	BSEN 1561 GJL200
2	DISC	D.I. / S.S.	ASTM A395 / ASTM A351 Gr. CF8
3	DISC HOLDING PLATE	C.C.S.	ASTM A216 Gr. WCB
4	BUSH	S.S.	ASTM A276 TYPE 304
5	SPRING	S.S. 316	–
6	L-KEY SCREW/BOLT	S.S. 316	–
7	STOPPER PIN	S.S.	ASTM A276 TYPE 410 / ASTM A276 TYPE 304
8	DISC HOLDING PIN	S.S.	ASTM A276 TYPE 410 / ASTM A276 TYPE 304
9	LIFTING HOOK	C.S.	IS 2062

DIMENSIONAL DATA

SIZE (mm)	40	50	65	80	100	125	150	200	250	300	350	400	450	500	600	650	700	750	800	900
L	50	54	54	65	64	71	76	92	114	181	184	191	203	213	222	305	305	305	305	368
ØC	36	42	57	70	81	115	133	181	225	300	350	400	450	500	604	650	700	750	777	900
ØD	82.5	101	120	133	162	192	218	273	328	403.5	446	510	545	602	713	750	800	870	875	975

Note : The above data is subject to change without notice due to our continuing product improvement program.