CAST IRON SINGLE BALL AIR RELEASE VALVE

INTRODUCTION

The inclusion of air in water can have a very considerable negative effect on the functioning of a pipeline system, such as

- Reduction of flow
- pressure fluctuations
- water hammer
- dry running of pumps

Leader Air Release Valve typically designed to mount at the high points in a piping system to automatically remove pockets of air as they accumulate. The valve can also be used to slowly release air in tanks and pump casings.

PRINCIPAL FEATURES

- Float-operated, resilient-seated valve designed to handle clean fluids.
- Single Ball Type, EPDM Coated Wooden Balls.
- Used to release entrapped air in any piping system.
- Maintains system flow efficiency.
- Temper Proof design, eliminates wastage of water.
- Screwed Male Threads to BS:21.
- An isolating valve must be provided below the air release valve to isolate it while doing the maintenance in the air release valve.
- Widely accepted by Municipal Corporations, Irrigation Authorities, Water Supply Authorities, National Thermal Power Corporation, Nuclear Power Corporation and Industrial users.

END CONNECTION

Screwed Male Threads to BS:21.

UTILISATION & SERVICE

Best suited for potable water & treated fresh water.

WORKING PRESSURE & TEMPERATURE LIMITS

Maximum Working Pressure: 16 Bar.
Maximum Working temperature: 80ºC.
See Pressure / Temperature Diagram.

Item Code:	CI0047
Pressure Rating:	PN-16
Testing Standard:	Mfg. Standard
Size Range:	15mm to 50mm
Product Standard:	Mfg. Standard

SUITABLE FOR

Water	Oil	Air	Gases	Steam
✓				

TEST PRESSURE (Hydrostatic)

Rating	PN-16
Body (Hyd.)	24 Bar
Seat (Hyd.)	17.6 Bar

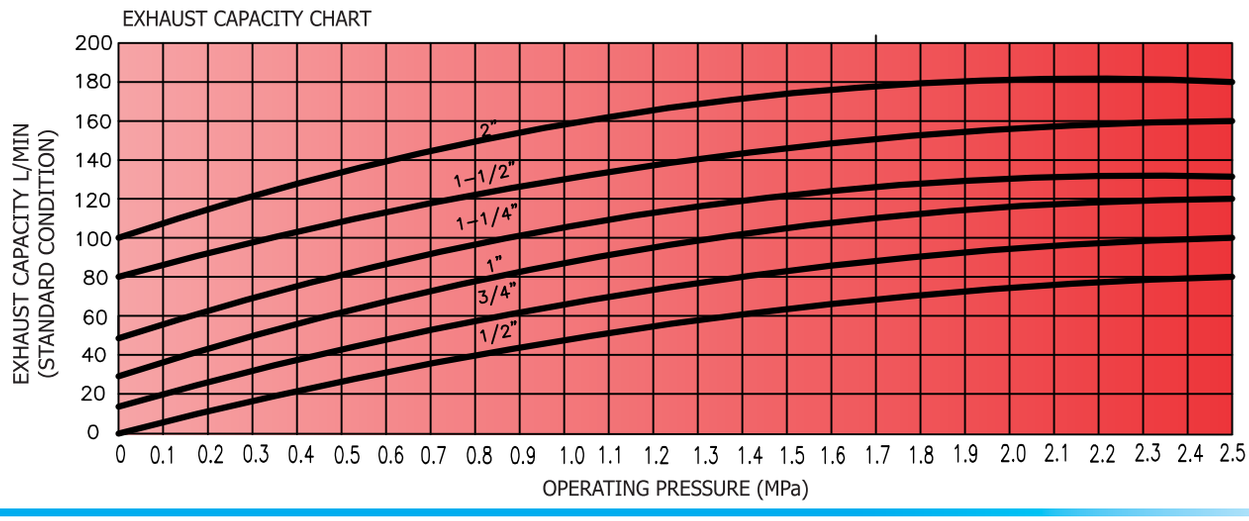

Note : The above data is subject to change without notice due to our continuing product improvement program.

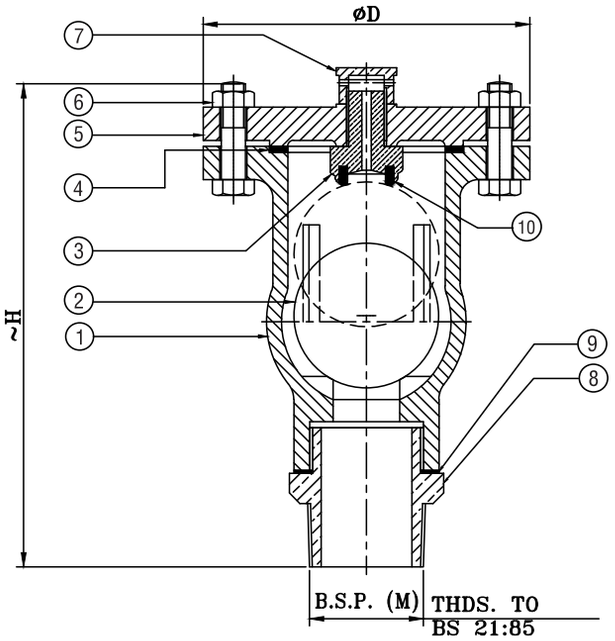

MATERIAL SPECIFICATION

P.No.	NAME OF PART	MATERIAL	SPECIFICATION
1	BODY	CAST IRON	BS 1452 Gr.220
2	BALL	RUBBER COATED WOODEN BALL	
3	NIPPLE (RUBBER COATED)	GUN METAL / STAINLESS STEEL	BSEN 1982 Gr. CC491K / TYPE 304
4	GASKET	C.N.A.F.	–
5	COVER	CAST IRON	BS 1452 Gr.220
6	NUTS & BOLTS	CARBON STEEL	BS 916
7	CAP	GUN METAL	BSEN 1982 Gr. CC491K
8	NIPPLE	GUN METAL / STAINLESS STEEL	BSEN 1982 Gr. CC491K / TYPE 304
9	GASKET	C.N.A.F.	–
10	SEAT RING	NITRILE RUBBER SHORE HARDNESS 65±5	

DIMENSIONAL DATA CLASS

SIZE (mm)	15	20	25	32	40	50
~H	240	250	250	250	257	257
ØD	172	172	172	172	172	172
B.S.P.(M)	1/2”	3/4”	1”	1-1/4”	1-1/2”	2"

Note : The above data is subject to change without notice due to our continuing product improvement program.