CAST IRON LUBRICATED TAPER PLUG COCK

INTRODUCTION

Leader Lubricated Plug valves are designed to work under dirty service where the valves need to be opened against high full Differential Pressure. Lubricant is injected under pressure into the valve between the plug face and the valve seat. The addition of the lubricant provides reduced friction, lowers the operating torque of the valve, and provides port sealing.
It is important to note that the selection of lubricants must be made based on the nature or properties of the media or fluid that is flowing through the valve. The lubricant acts as a renewable seal and must not be dissolved and carried away by the fluid passing through the valve. Should this occur, it would result in both the contamination of the fluid as well as the destruction of the seal that exists between the plug and the valve body, leading to leakage. The anticipated fluid temperature must also be taken into account when selecting a lubricant for use.

PRINCIPAL FEATURES

- Regular Pattern, Top Entry, Pressurised Lubricant Feed.
- Simple in design.
- Fast to open and close due to the quarter-turn operation.
- The Robust metal to metal seats ensure long valve life on any service, even in presence of solid particles in the line media.
- Different Lubricant / grease material is available depending upon the Media or fluid application – such as water, natural gas, fuel oil, air, hydraulic oil, food, solvents, etc. The nature of the media and its properties will determine the suitable grease materials for valve.
- Actuation type – Wrench operated, electrical or pneumatic.
- Flanges as per BS:4504 (FF) Drilled.
- Due to its outstanding advantages, it is an excellent and perfect solution for highly corrosive environments and complex chemicals.
- Widely used in the ash slurry, chemical, petroleum, gas, and food industries.

Item Code:	CI0025
Pressure Rating:	PN-16
Testing Standard:	BSEN 12266 Part-1
Size Range:	15mm to 200mm
Product Standard:	Mfg. Standard

SUITABLE FOR

Water	Slurry	Chemical	Petroleum	Gas
✓	✓	✓	✓	✓

END CONNECTION

Flanges as per BS:4504 (FF) Drilled.
Flange drilling as per other standards also available upon request.

TEST PRESSURE (Hydrostatic)

Rating	PN-16
Body (Hyd.)	24 Bar
Seat (Hyd.)	17.6 Bar

UTILISATION & SERVICE

"LEADER" Cast Iron Lubricated Taper Plug Valves are suitable for above-ground installations.
Best suited for water, ash slurry, chemical, petroleum, gas, and food industries.

WORKING PRESSURE

Maximum Working Pressure: 16 Bar.
See Pressure / Temperature Diagram.

TEMPERATURE LIMITS

Maximum Working temperature: 120°C.
See Pressure / Temperature Diagram.

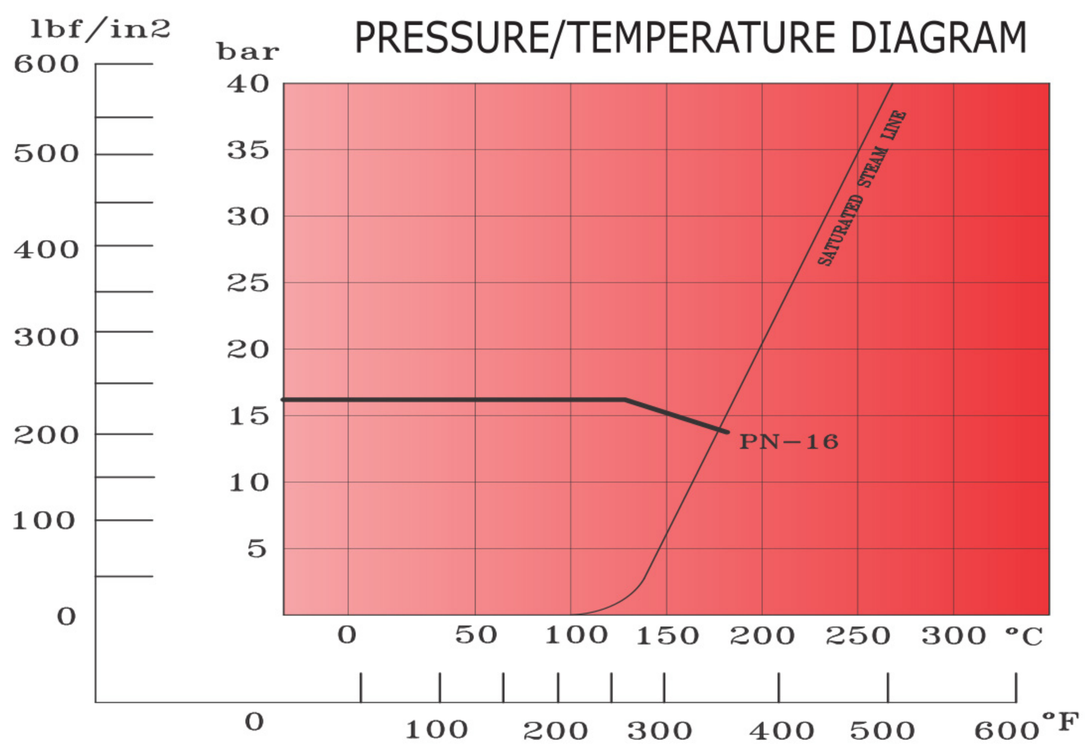

Note : The above data is subject to change without notice due to our continuing product improvement program.

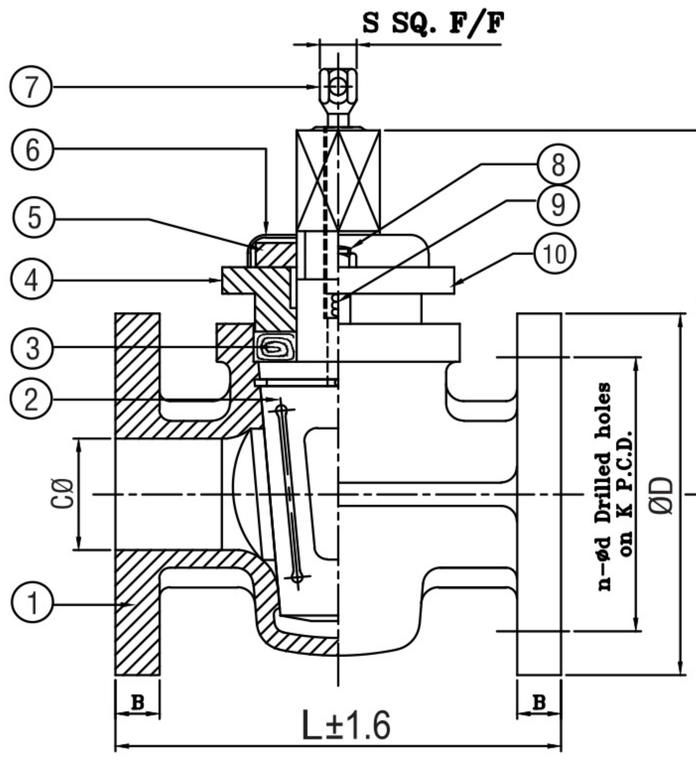

(Figure for size: 15mm to 50mm)

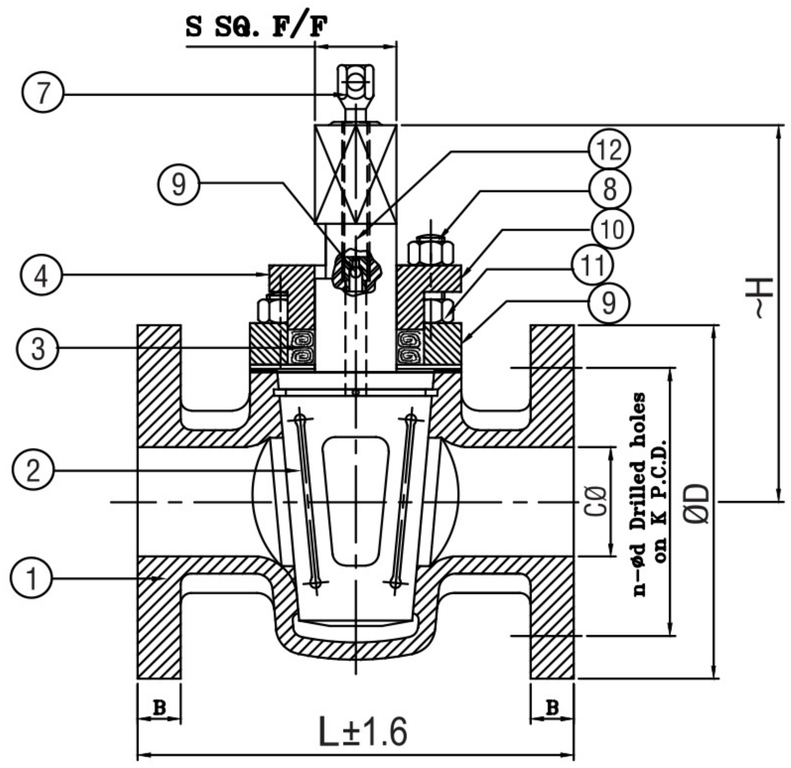

(Figure for size: 65mm to 200mm)

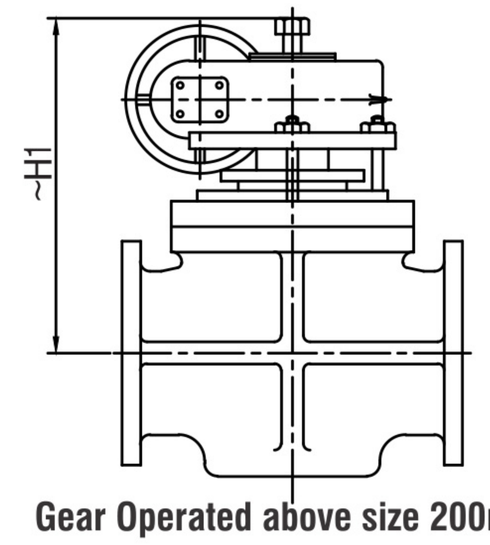

Gear Operated above size 200mm

DIMENSIONAL DATA

SIZE (mm)	15	20	25	32	40	50	65	80	100	125	150	200
L ±1.6	121	121	140	152	165	203	222	241	305	356	394	457
~H	83	83	95	129	129	160	197	227	254	297	325	398
~H1	-	-	-	-	-	-	-	-	-	470	490	570
S	14.2	14.2	19	27	27	38.1	38.1	41.3	47.6	50.8	50.8	58.7
ØC	12.7	19	25	32	38	51	63.5	76	101.5	127	152	203
ØD	95	105	115	140	150	165	185	200	220	250	285	340
B	14	16	16	18	18	20	20	22	24	26	26	30
K	65	75	85	100	110	125	145	160	180	210	110	295
n	4	4	4	4	4	4	4	8	8	8	8	12
Ød	14	14	14	19	19	19	19	19	19	19	23	23

MATERIAL SPECIFICATION

P.No.	NAME OF PART	MATERIAL	SPECIFICATION
1	BODY	CAST IRON	BSEN 1561 Gr. 200
2	PLUG	CAST IRON	BSEN 1561 Gr. 200
3	GLAND PACKING	GRAPHOIL	-----
4	GLAND	CARBON STEEL	IS 2062 Gr. A
5	QUARTER STOP	CARBON STEEL	-----
6	DUST COVER	RUST PROOF STEEL	-----
7	LUBRICANT SCREW	CARBON STEEL	-----
8	GLAND STUDS & NUTS	CARBON STEEL	BS 916
9	BALL CHECK VALVE	CARBON STEEL	-----
10	STUFFING BOX	CAST IRON	BSEN 1561 Gr. 200
11	STUDS & NUTS	CARBON STEEL	BS 916
12	LUBRICANT	TO SUIT SERVICE CONDITIONS	-----

Note : The above data is subject to change without notice due to our continuing product improvement program.