CAST IRON BUTTERFLY VALVE (LUGGED)

INTRODUCTION

Leader Butterfly Valves are designed to meet the flow control requirement of plumbing, fire-fighting and HVAC application. The body seat is vulcanised in-situ onto the body and offers 100% bi-directional sealing. The lugged wafer style body has universal design to fit between flanges of all almost all standards.

PRINCIPAL FEATURES

- Design Standard: BS 5155, EN 593, API 609 CAT. A.
- Lugged Wafer type design makes it compact and take lesser space.
- Dynamic sealing of concentric disc is obtained with vulcanised rubber seat at very low torque.
- High precision disc external profile for smooth operation & tight shut off sealing with low operating torque.
- Moulded rubber body seat is extending on to the contact faces ensures perfect sealing and eliminates the need for separate flange gaskets.
- Notch plate ensures the locking of the hand lever at different position in addition to open and closed position.
- Shaft sealing is ensured by double sealing of Bush and `O' ring combination.
- Body castings made of superior FG 260 grade cast iron to ensure additional strength.
- Valve disc made of ductile iron with epoxy coating / SS304 offers high strength against pressure.
- Shaft made of martensitic stainless steel to ensure maximum strength and torsional rigidity.
- Two piece stem design which is precisely guided between the PTFE bush & Rubber 'O' Rings to prevent leakage, corrosion and stem seizure.
- Taper disc holder pins to ensure shock proof shaft to disc connection & suitability of replacement at field.
- Easy visual control of open / closed position marked on the notch plate.
- Operation mode manual, gear, electric, pneumatic.
- Available with locking arrangement on request.
- Temper Switch / supervisory limit switches option available on request.
- Top flange as per ISO 5211 to suit F Series flanges of Gears and Actuators.

END CONNECTION

Suitable for Clamping between flanges as per ASME B16.1 Class-125, ASME B16.5 Class-150, IS 6392, Table 17, IS 1538, BSEN 1092 PN25, BS:10 Table D, E, F, H.

UTILISATION & SERVICE

Best suited for water, HVAC, fire-fighting service.

WORKING PRESSURE & TEMPERATURE LIMITS

Maximum Working Pressure: 16 Bar.
Maximum Working temperature: 120°C.
See Pressure / Temperature Diagram.

Item Code:	CI0029,	CI0030
Disc:	Ductile Iron,	SS(CF8)
Pressure Rating:	PN-16	
Testing Standard:	BSEN 12266 Part-1	
Size Range:	40mm to 400mm	
Product Standard:	BS 5155, EN 593, API 609 CAT. A.	

SUITABLE FOR

Water	Oil	Air	Gases
✓			

TEST PRESSURE (Hydrostatic)

Rating	PN-16
Body (Hyd.)	24 Bar
Seat (Hyd.)	17.6 Bar

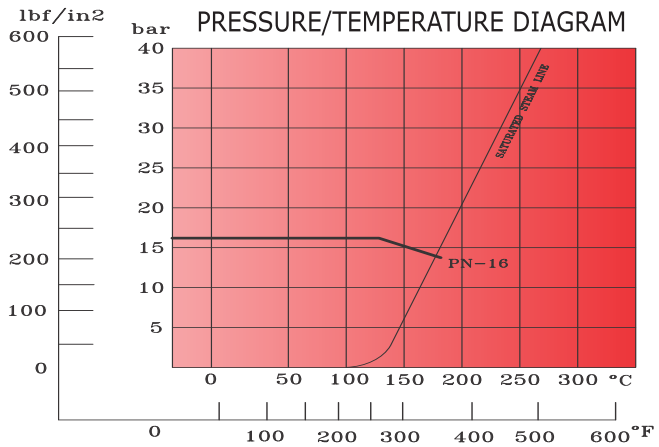

Note : The above data is subject to change without notice due to our continuing product improvement program.

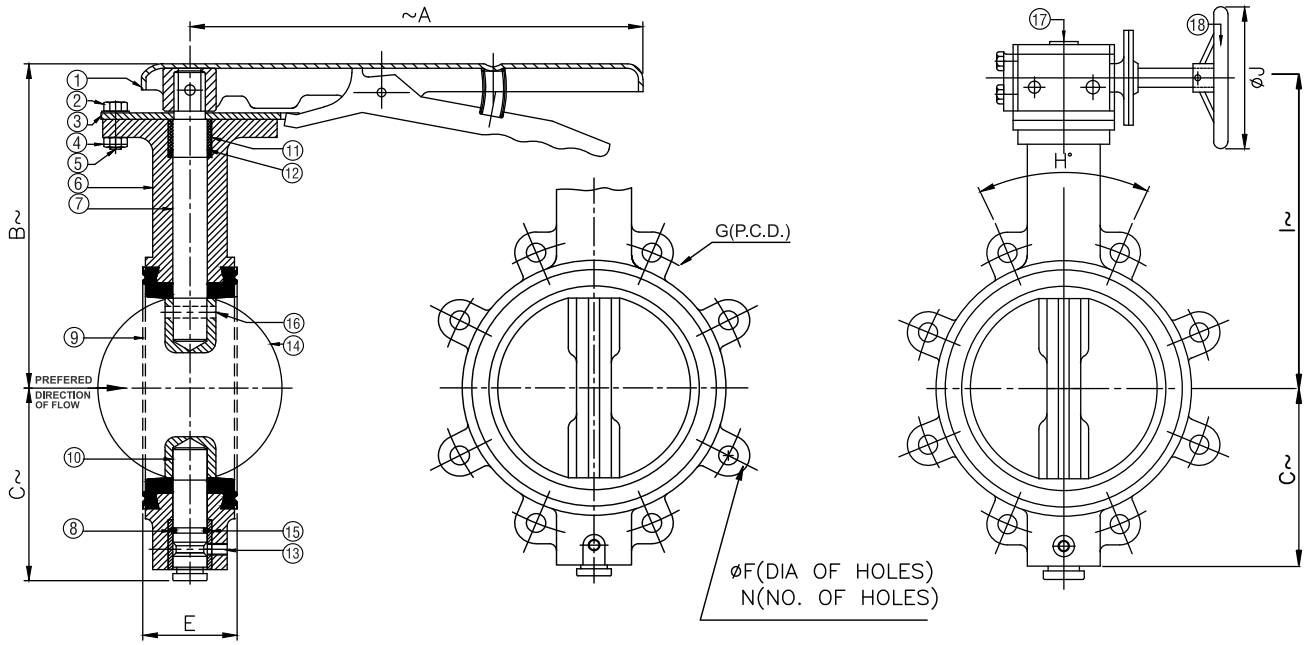

DIMENSIONAL DATA

SIZE (mm)	40	50	65	80	100	125	150	200	250	300	350	400
~A	260	260	260	260	260	260	260	356	406	406	-	-
B~	120	133	150	153	210	200	237	235	290	330	-	-
C~	64	75	96	100	120	140	147	178	214	260	281	315
E	$33^{\pm1}$	$43^{\pm1}$	$46^{\pm1}$	$46^{\pm1}$	$52^{\pm1}$	$56^{\pm1}$	$56^{\pm1}$	$60^{\pm2}$	$68^{\pm2}$	$78^{\pm2}$	$92^{\pm2}$	$102^{\pm2}$
ØF	15.8	19	19	19	19	22.3	22.3	22.3	25.4	25.4	28.6	28.6
G	98.5	120.6	139.7	152.4	190.5	215.9	241.3	298.4	361.9	431.8	476.2	539.8
I~	-	-	-	-	-	-	240	240	290	330	340	412
ØJ	-	-	-	-	-	-	200	200	250	250	300	500
N	4	4	4	4	8	8	8	8	12	12	12	12

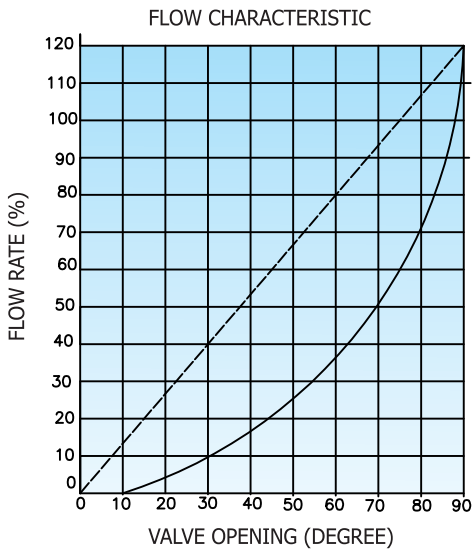

MATERIAL SPECIFICATION

P.No.	NAME OF PART		MATERIAL
1	LEVER	1-1/2" TO 6"	M.S. SHEET (IS 2062 Gr.B) / C.C.S. (ASTM A216 Gr. WCB) / NODULAR IRON (B.S. 2789 Gr. 500/7)
		8" TO 12"	
2	SPRING WASHER		CARBON STEEL
3	COVER PLATE		M.S. SHEET
4	NUTS		C.S. (BS 4190) / ALLOY STEEL (ASTM A194 Gr.2H)
5	BOLTS		C.S. (BS 4190) / ALLOY STEEL (ASTM A193 Gr.B7)
6	BODY		C.I. (EN 1561 Gr. GJL 200)
7	UPPER STEM		S.S. (ASTM A276 TYPE 410) OR ITS EQ.
8	`O' RING		BUNA-N / EPDM (SHORE HARDNESS 60°±4)
9	MOULDED LINER		BUNA-N / EPDM (SHORE HARDNESS 70°±4)
10	LOWER STEM		S.S. (ASTM A276 TYPE 410) OR ITS EQ.
11	BUSHING		HEAVY DUTY CORROSION RESISTANT TO ABSORB SIDE THRUST
12	WASHER		BUNA-N / EPDM (SHORE HARDNESS 60°±4)
13	GRUB SCREW		MILD STEEL
14	DISC		D.I. (ASTM A395) / S.S. (ASTM A351 Gr. CF8)
15	BUSH		PH. BRONZE / PTFE
16	TAPER PIN		STEEL (HARDENED)
17	GEAR BOX		C.I. (EN 1561 Gr. GJL 200)
18	HAND WHEEL		C.I. (EN 1561 Gr. GJL 200) / M.S. (IS 2062 Gr.B)

Note : The above data is subject to change without notice due to our continuing product improvement program.