DUCTILE IRON

BALANCING VALVE (DOUBLE REGULATING)

INTRODUCTION

Leader Static Double Regulating Balancing valves are valves designed to ensure proper flow rate is maintained to keep the Heating and cooling system within operating parameter. It equalizes system pressure, creating comfortable thermal conditions in the building while optimizing energy and operating costs. It double regulating feature create constant output from a variable input, the flow rate will be constant and predictable. There are two access points (test cock) that allow to measure the pressure before and after the valve and serve as checkpoints for either manual testing or automatic flow regulator devices.

PRINCIPAL FEATURES

- Designed as per BS:7350.
- Body & Bonnet made of sturdy construction in Ductile Iron.
- EPDM coated disc ensures tight sealing.
- Oblique seat offers a good adjustment precision and a resistant lower than the valves with a straight seat.
- Head losses are small, which for a same size leads to more important flows than those borne by a straight seat valve.
- Precise double regulation, accuracy of flow measurement is ±5% at the full open position of the valve.
- Provided with Inlet / Outlet pressure test cocks to measure the pressure before and after the valve.
- Hand wheel Operated.
- Flanged ends to DIN 2533 PN16 (RF).

END CONNECTION

Flanges as per DIN 2533 PN16 (RF), Drilled.
Flange drilling as per other standards also available upon request.

UTILISATION & SERVICE

"LEADER" Ductile Iron Balancing Valves are suitable for above-ground installations.
Best suited for Water, Ethylene Glycol Mixture, HVAC application

WORKING PRESSURE

Maximum Working Pressure: 16 Bar.
See Pressure / Temperature Diagram.

TEMPERATURE LIMITS

Maximum Working temperature: 120°C.
See Pressure / Temperature Diagram.

Item Code:	DI0103
Pressure Rating:	PN-16
Testing Standard:	BS 7350
Size Range:	50mm to 250mm
Product Standard:	BS 7350

SUITABLE FOR

Water	Ethylene Glycol Mixture
✓	✓

TEST PRESSURE (Hydrostatic)

Rating	PN-16
Body (Hyd.)	24 Bar
Seat (Hyd.)	17.6 Bar

PRESSURE/TEMPERATURE DIAGRAM

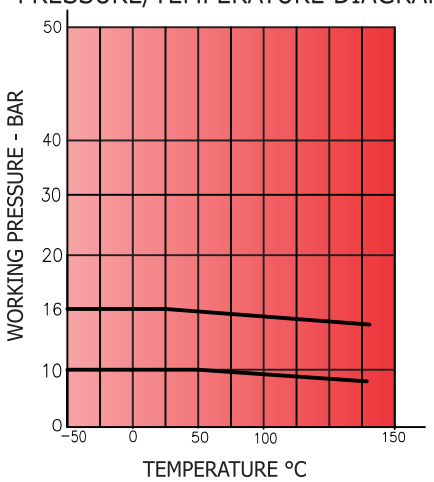

Note : The above data is subject to change without notice due to our continuing product improvement program.

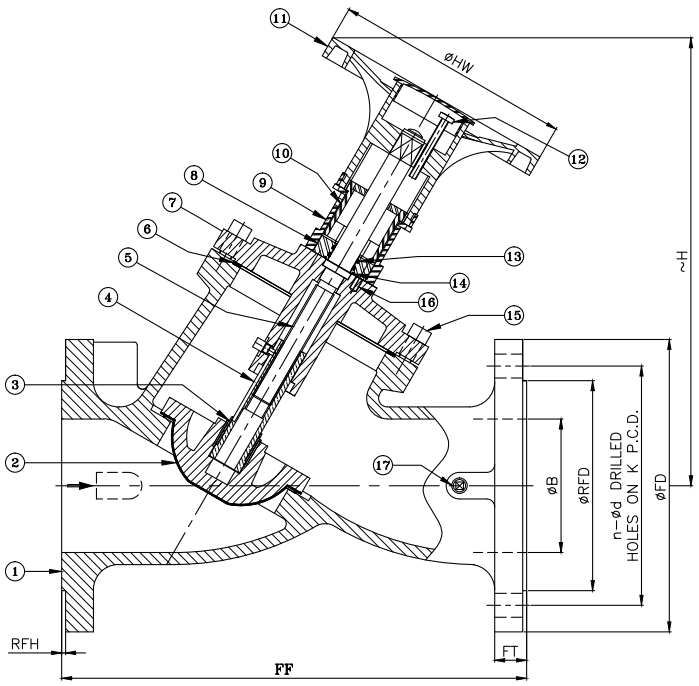

MATERIAL SPECIFICATION

P.No.	NAME OF PART	MATERIAL
1	BODY	DUCTILE IRON (ASTM A395)
2	DISC	D.I. (ASTM A395) + RUBBER FACING
3	DISC NUT	BRASS ROD (DIN 12165 Gr. CW721R)
4	BOTTLE	BRASS ROD (DIN 12165 Gr. CW721R)
5	STEM	S.S. (ASTM A276 TYPE 410)
6	GASKET	GRAPHITE FILLED
7	BONNET	DUCTILE IRON (ASTM A395)
8	PLATE	STAINLESS STEEL (TYPE 304)
9	INDICATOR CAP	PLASTIC
10	POSITION INDICATOR	PLASTIC
11	HAND WHEEL	CAST IRON
12	ADJUSTING SCREW	MILD STEEL
13	O-RING	RUBBER / EPDM
14	O-RING	RUBBER / EPDM
15	L-KEY BOLTS	STAINLESS STEEL (TYPE 304)
16	L-KEY BOLTS	STAINLESS STEEL (TYPE 304)
17	PLUG	H.T. BRASS (DIN 12165 Gr. CW721R)

DIMENSIONAL DATA

SIZE (mm)	50	65	80	100	125	150	200	250	300
FF $^{\pm 2}$	230	290	310	350	400	480	600	730	850 $^{\pm 3.2}$
FT	20	20	22	24	26	26	30	32	32
RFH	3	3	3	3	3	3	3	3	4
ØB	50	65	80	100.5	125	150	200	250	300
ØRFD	102	122	138	158	188	212	268	320	378
ØFD	165	185	200	220	250	285	340	405	460
~H	305	330	335	340	400	410	575	615	662
ØHW	180	180	180	180	200	200	350	350	350
K	125	145	160	180	210	240	295	355	410
nxØd	4x18	4x18	8x18	8x18	8x18	8x22	12x22	12x26	12x26

Note : The above data is subject to change without notice due to our continuing product improvement program.