DUCTILE IRON BUTTERFLY VALVE

INTRODUCTION

Leader Ductile Iron Butterfly Valves are designed to meet the flow control requirement of plumbing, fire-fighting and HVAC application. The body seat is vulcanised in-situ onto the body and offers 100% bi-directional sealing. The wafer style body has universal design to fit between flanges of all almost all standards.

PRINCIPAL FEATURES

- Design Standard: BS 5155, EN 593, API 609 CAT. A.
- Wafer type design makes it compact and take lesser space.
- Dynamic sealing of concentric disc is obtained with vulcanised rubber seat at very low torque.
- High precision disc external profile for smooth operation & tight shut off sealing with low operating torque.
- Moulded rubber body seat is extending on to the contact faces ensures perfect sealing and eliminates the need for separate flange gaskets.
- Notch plate ensures the locking of the hand lever at different position in addition to open and closed position.
- Shaft sealing is ensured by double sealing of Bush and `O' ring combination.
- Body castings made of superior Ductile Iron ASTM A395 grade to ensure additional strength.
- Valve disc made of ductile iron with epoxy coating / SS304 offers high strength against pressure.
- Shafts made of martensitic stainless steel to ensure maximum strength and torsional rigidity.
- Two piece stem design which is precisely guided between the PTFE bush & Rubber 'O' Rings to prevent leakage, corrosion and stem seizure.
- Taper disc holder pins to ensure shock proof shaft to disc connection & suitability of replacement at field.
- Easy visual control of open / closed position marked on the notch plate.
- Operation mode manual, gear, electric, pneumatic.
- Available with locking arrangement on request.
- Temper Switch / supervisory limit switches option available on request.
- Top flange as per ISO 5211 to suit F Series flanges of Gears and Actuators.

END CONNECTION

Suitable for Clamping between flanges as per ASME B16.5 Class-150.
Suitability for insertion between other flange standards also available upon request.

UTILISATION & SERVICE

Best suited for water, HVAC, fire-fighting service.

WORKING PRESSURE & TEMPERATURE LIMITS

Maximum Working Pressure: 20 Bar.
Maximum Working temperature: 120ºC.
See Pressure / Temperature Diagram.

Item Code:	DI0091,	DI0091A,	DI0091B
Disc:	Ductile Iron,	SS(CF8),	SS(CF8M)
Pressure Rating:	PN-20		
Testing Standard:	BSEN 12266 Part-1		
Size Range:	40mm to 300mm		
Product Standard:	BS 5155, EN 593, API 609 CAT. A.		

SUITABLE FOR

Water	Oil	Air	Gases
✓			

TEST PRESSURE (Hydrostatic)

Rating	PN-20
Body (Hyd.)	30 Bar
Seat (Hyd.)	22 Bar

PRESSURE/TEMPERATURE DIAGRAM

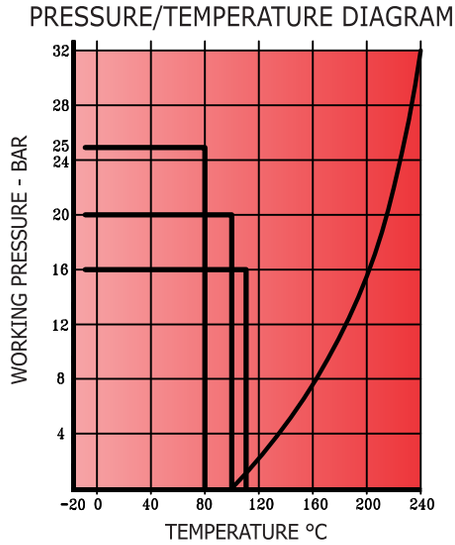

Note : The above data is subject to change without notice due to our continuing product improvement program.

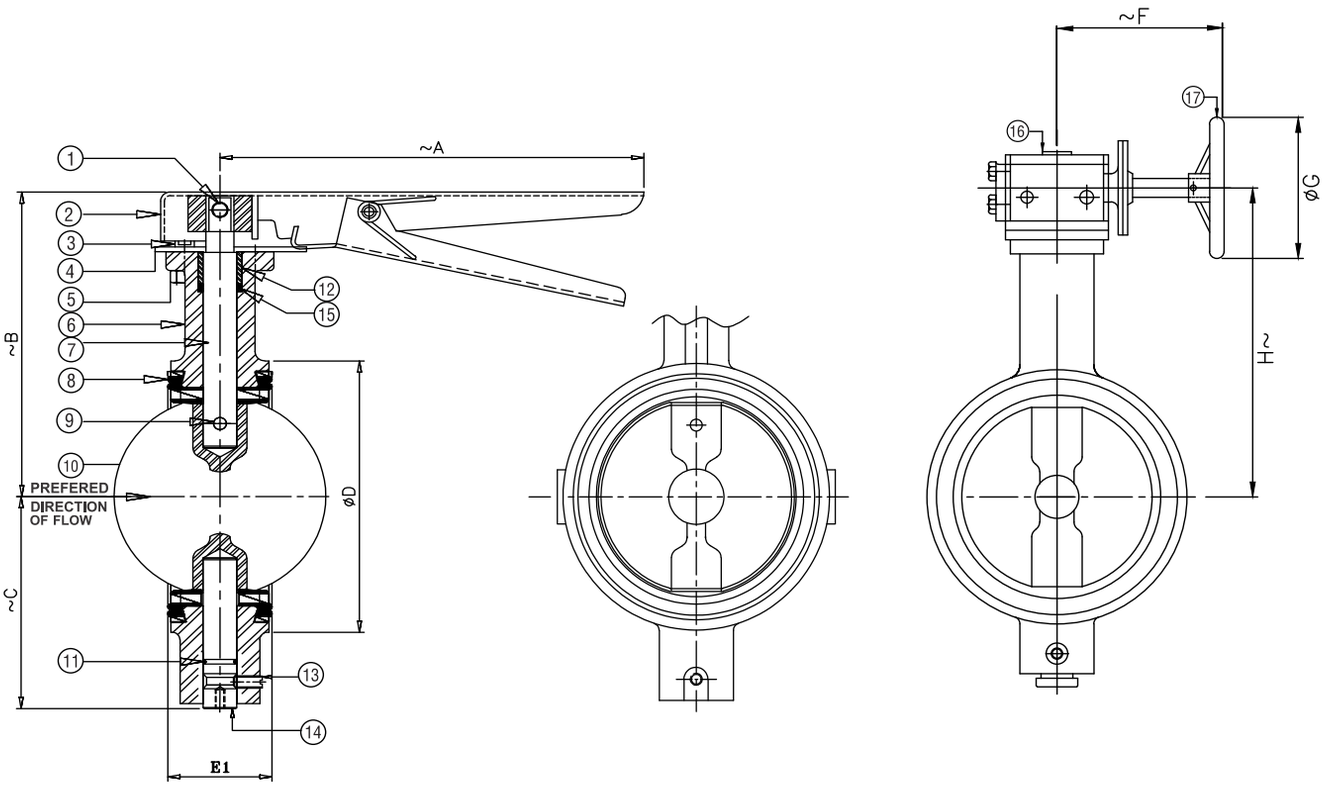

DIMENSIONAL DATA

SIZE (mm)	40	50	65	80	100	125	150	200	250	300
~A	212	212	212	212	212	212	260	356	406	406
~B	118	130	146	151	162	200	210	236	290	320
~C	64	70	81	81	116	140	147	171	211	248
ØD	81	95	111	120	144	175	200	255	325	374
E1	$33^{\pm1}$	$43^{\pm1}$	$46^{\pm1}$	$46^{\pm1}$	$52^{\pm1}$	$56^{\pm1}$	$56^{\pm1}$	$60^{\pm1}$	$68^{\pm2}$	$78^{\pm2}$
~F	180	180	180	180	180	180	180	180	220	220
ØG	175	175	175	175	175	175	175	175	250	350
H~	125	137	153	160	170	207	218	243	300	330

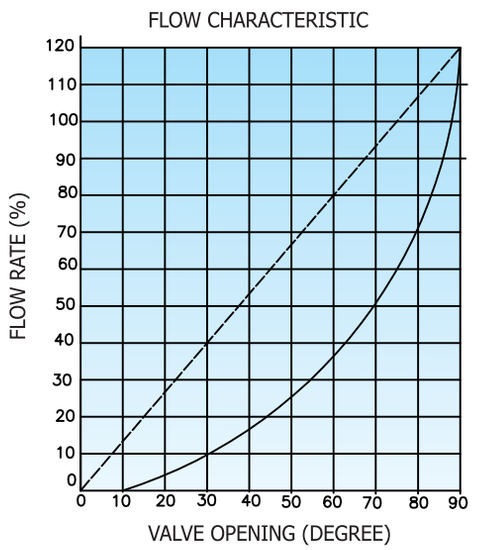

MATERIAL SPECIFICATION

P.No.	NAME OF PART		MATERIAL
1	GRUB SCREW		MILD STEEL
2	HANDLE	UP TO 6"	M.S. SHEET (IS 2062) FABRICATED (POWDER COATED) / C.C.S. (ASTM A216 Gr. WCB)
		8" TO 12"	
3	L-KEY BOLT		CARBON STEEL
4	INDEXING PLATE		MILD STEEL (IS 2062)
5	NUT		CARBON STEEL
6	BODY		D.I. (ASTM A395)
7	UPPER STEM		S.S. (IS 6603 x 12 Cr. 12)
8	MOULDED LINER		BUNA-N / EPDM (SHORE HARDNESS 70°±4)
9	TAPER PIN		HANDENED STEEL
10	DISC		D.I. (ASTM A395) / S.S. (ASTM A351 Gr. CF8) / S.S. (ASTM A351 Gr. CF8M)
11	`O' RING		BUNA-N / EPDM (SHORE HARDNESS 60°±4)
12	BUSHING		PTFE
13	LOWER STEM		S.S. (IS 6603 x 12 Cr. 12)
14	GRUB SCREW		MILD STEEL
15	PACKING		BUNA-N / EPDM (SHORE HARDNESS 60°±4)
16	GEAR BOX		-----
17	HAND WHEEL		MILD STEEL (IS 2062)

Note : The above data is subject to change without notice due to our continuing product improvement program.