# DUCTILE IRON

# DUAL PLATE CHECK VALVE

## INTRODUCTION

Leader Ductile Dual Plate Check Valves are automatic, quick-acting valve designed to prevent the reversal of flow in a piping system. The two valve discs, eccentrically embedded, have springs which force the valve to close in case no pressure is available. The pressure of the fluid passing through the system opens the valve discs, while any reversal of flow will close the valve discs. Closure is accomplished by the spring action and by back pressure.

## PRINCIPAL FEATURES

- Design Standard: API 594.
- Retainer-less Construction ensures that they do not drill entirely into the valve body to allow the hinge-pin and the stop-pin to be fitted with a dual-plate check valve. The feature ensures high integrity & tamper-proof design, ensures no leakage from the body.
- Body & Disc castings made of superior Ductile Iron ASTM A395 grade to ensure additional strength.
- Wafer type design, to take lesser space than the Reflux / Swing Check Valve.
- Being light in weight, has more rugged construction than the standard Swing Type Check Valve, which needs expensive foundation and special supports.
- Less wear and tear of seat surface due to resilient integrally moulded body seating face.
- Stopper pin prevents the discs from coming into contact with each other and thus prevents disc damage. The stopper pin also prevents spring failure by ensuring that the discs don't travel beyond the full-open position.
- Low cracking pressure design (operable at low pressures).
- Independent spring design feature also available which gives less scrubbing of disc & independents movement of discs.
- Inherently non-slamming, no external devices / attachment required.
- Water hammering effect is minimized in this design, since the closing of valve does not depend upon any back pressure or flow.
- Either vertically (only upwards) or horizontally installed.
- Lifting eyebolt option is provided.

## END CONNECTION

Wafer type Suitable for clamping between flanges as per ASME B16.5 Class -150.
Suitability for insertion between other flange standards also available upon request.

## UTILISATION & SERVICE

Best suited for water, HVAC, fire-fighting, compressed air application.

## WORKING PRESSURE & TEMPERATURE LIMITS

Maximum Working Pressure: 20 Bar.
Maximum Working temperature: 120°C.
See Pressure / Temperature Diagram.

| | | |
|---|---|---|
| **Item Code:** | DI0083, | DI083B |
| **Disc:** | Ductile Iron, | SS(CF8) |
| **Pressure Rating:** | PN-20 | |
| **Testing Standard:** | API 598 | |
| **Size Range:** | 50mm to 600mm | |
| **Product Standard:** | API 594 | |

## SUITABLE FOR

| Water | Oil | Air | Gases | Steam |
|---|---|---|---|---|
| ✓ | | ✓ | | |

## TEST PRESSURE (Hydrostatic)

| Rating | PN-20 |
|---|---|
| Body (Hyd.) | 30 Bar |
| Seat (Hyd.) | 22 Bar |

PRESSURE/TEMPERATURE DIAGRAM

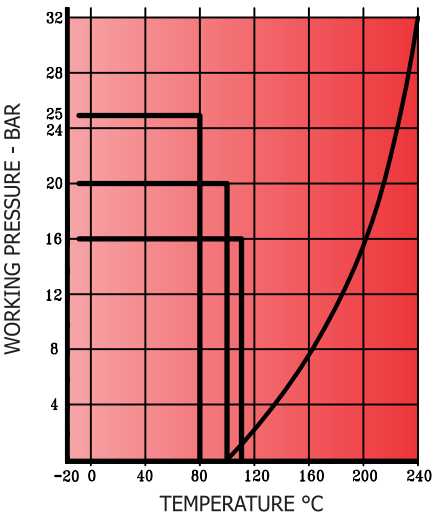


Note : The above data is subject to change without notice due to our continuing product improvement program.

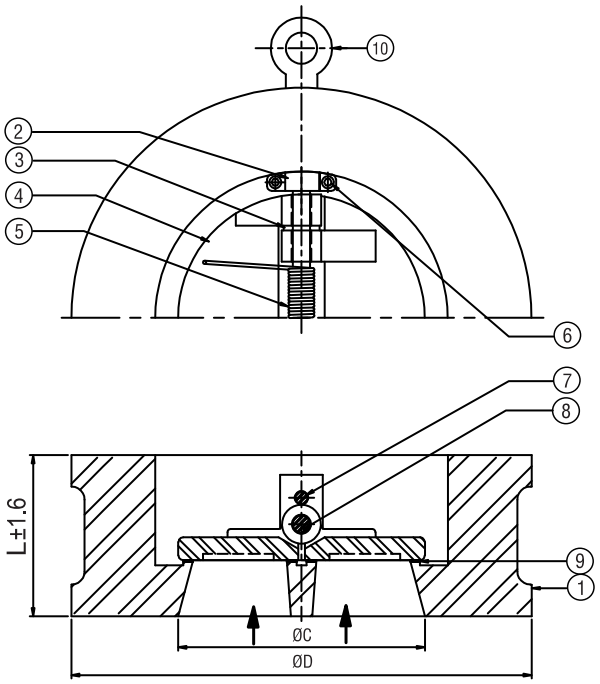


## MATERIAL SPECIFICATION

| P.No. | NAME OF PART | MATERIAL | SPECIFICATION |
|---|---|---|---|
| 1 | BODY | DUCTILE IRON | ASTM A395 |
| 2 | DISC HOLDING PLATE | DUCTILE IRON | ASTM A395 |
| 3 | BUSH | STAINLESS STEEL | ASTM A276 TYPE 410 |
| 4 | DISC | D.I. / S.S. | ASTM A395 / ASTM A351 Gr. CF8 |
| 5 | SPRING | STAINLESS STEEL | TYPE 316 |
| 6 | L-KEY BOLT | STAINLESS STEEL | TYPE 304 |
| 7 | STOPPER PIN | STAINLESS STEEL | ASTM A276 TYPE 410 |
| 8 | DISC HOLDER PIN | STAINLESS STEEL | ASTM A276 TYPE 410 |
| 9 | SEAT | EPDM FACING | |
| 10 | EYE BOLT | CARBON STEEL | ANY GRADE |

## DIMENSIONAL DATA CLASS

| SIZE (mm) | 50 | 65 | 80 | 100 | 125 | 150 | 200 | 250 | 300 | 350 | 400 | 450 | 500 | 600 |
|---|---|---|---|---|---|---|---|---|---|---|---|---|---|---|
| $L^{\pm 2}$ | 54 | 60 | 67 | 67 | 83 | 95 | 127 | 140 | $181^{\pm 3.2}$ | 184 | 191 | 203 | 213 | 222 |
| ØC | 50 | 65 | 75.2 | 99 | 125 | 152.4 | 200 | 250 | 300 | 350 | 400 | 450 | 500 | 600 |
| ØD | 101 | 119 | 130 | 171 | 192 | 216 | 273 | 334 | 400 | 446 | 510 | 540 | 602 | 713 |