FORGED BRASS

Y-TYPE STRAINER

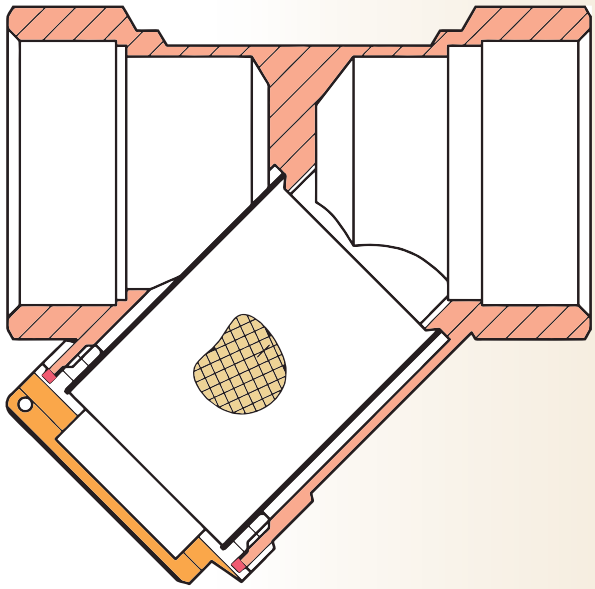

BODY	1
PLUG	2
SCREEN	3
GASKET	4

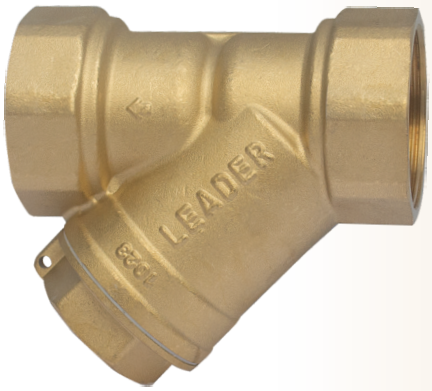

- **Item Code:** FLB230
- **Pressure Rating:** PN-20
- **Testing Standard:** BSEN 12266 PART-1
- **Size Range:** 15mm to 50mm
- **Product Standard:** Mfg. Standard

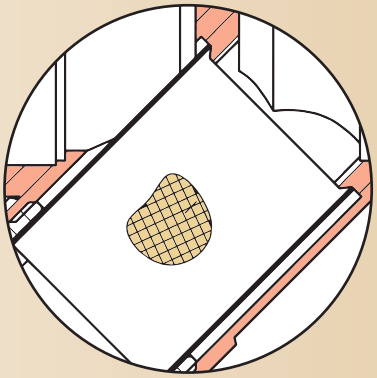

PRESSURE/TEMPERATURE DIAGRAM

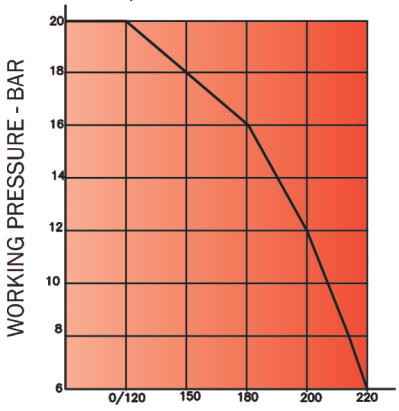

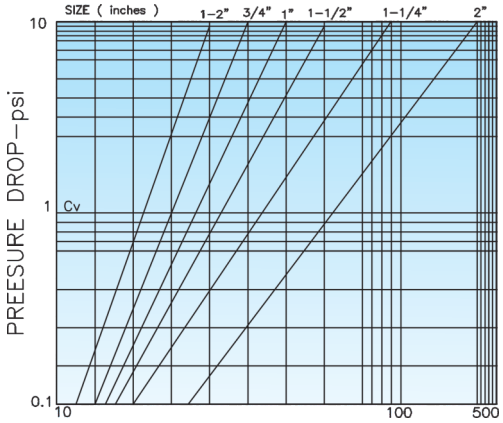

(PRESSURE DROP CURVES ARE BASED ON WATER FLOW WITH STANDARD SCREENS.)

Note : The above data is subject to change without notice due to our continuing product improvement program.

PRINCIPAL FEATURES

- Screwed female end as per IS 554 / BS 21.
- Forged Brass rugged body construction.
- Stainless steel (SS304) Screen Having 1mm dia perforation.
- Large screen area increases the strainer efficiency with low pressure drops.
- Y-Strainers can be installed in both Horizontal and Vertical orientation which makes the installation more versatile and easier.
- Y-Strainers can withstand more pressure than other types of strainers.

END CONNECTION

- Screwed Female BSP Parallel Threads.

UTILISATION & SERVICE

"LEADER" Forged Brass Y Strainer are suitable for Water service.

WORKING PRESSURE

- Maximum Working Pressure: 20 Bar.
- See Pressure / Temperature Diagram.

TEMPERATURE LIMITS

- Maximum working temperature: 225 °C.
- See Pressure / Temperature Diagram.

PRESSURE RATING: PN-20

TEST PRESSURE (Hydrostatic)
BODY
30 Bar

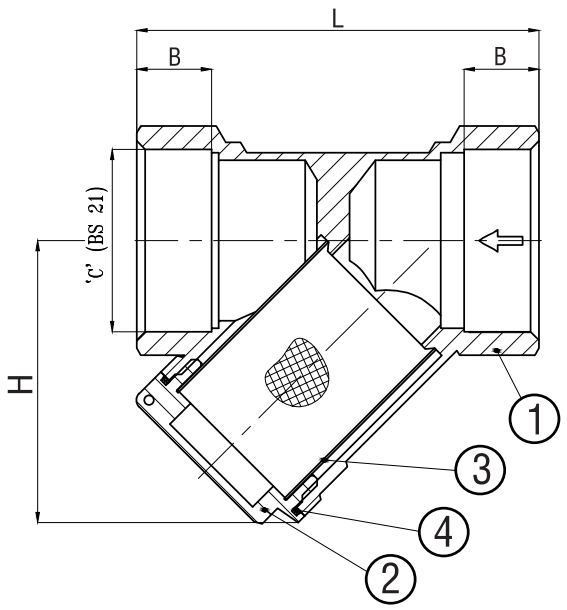

SUITABLE FOR

Water	Oil	Air	Gases
✓			

DIMENSIONAL DATA

SIZE (mm)	15	20	25	32	40	50
L	51	61	66	86	110.5	129
C	1/2	3/4	1	1-1/4	1-1/2	2
B	11.5	13	13	16	20.5	24
H	33	42	50	60	70	89
Item Code	FLB230	FLB230	FLB230	FLB230	FLB230	FLB230

MATERIAL SPECIFICATION

P.No.	NAME OF PART	MATERIAL	SPECIFICATION
1	BODY	FORGED BRASS	EN 12165 Gr.617N
2	PLUG	FORGED BRASS	EN 12165 Gr.617N
3	SCREEN	STAINLESS STEEL	(TYPE 304) Ø1mm PERFORATION
4	GASKET	PTFE	

Note : The above data is subject to change without notice due to our continuing product improvement program.