FORGED BRASS BALL VALVE WITH STRAINER

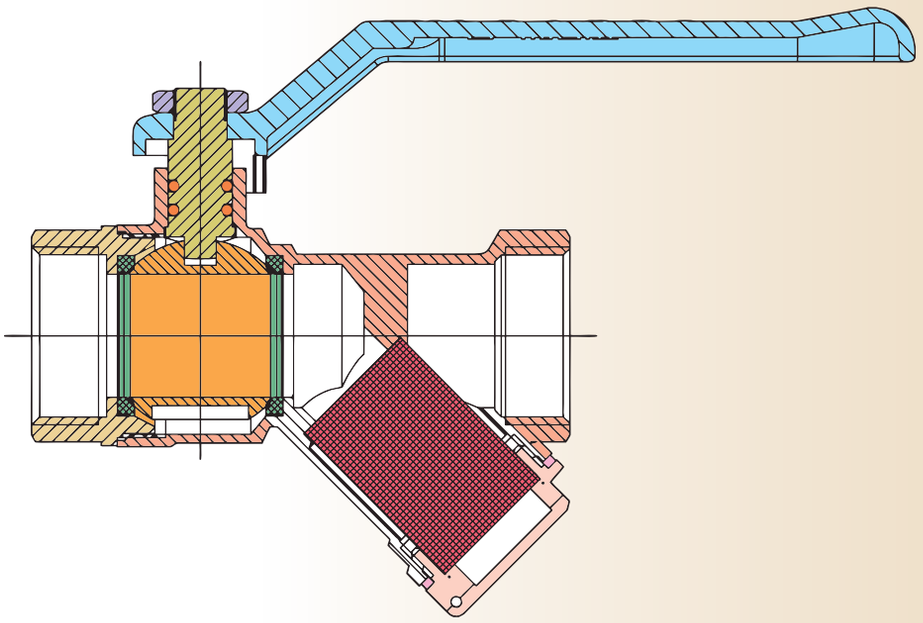

BODY	1
BALL	2
SEAT	3
BONNET	4
'O' RING	5
STEM	6
LEVER	7
NUT	8
SCREEN	9
GASKET	10
CAP	11

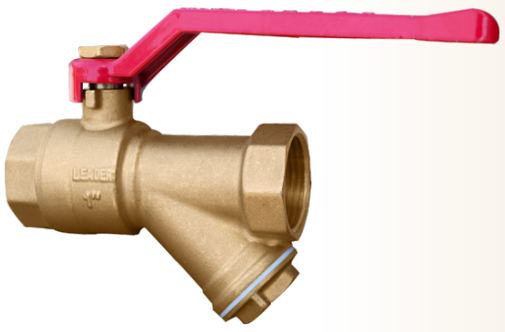

- **Item Code:** FLB285
- **Pressure Rating:** PN-20
- **Testing Standard:** BSEN 12266 Part-1
- **Size Range:** 15mm to 50mm
- **Product Standard:** Mfg. Standard

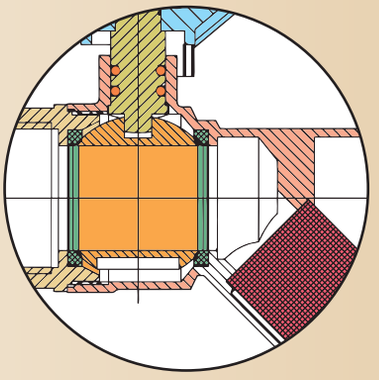

PRESSURE/TEMPERATURE DIAGRAM
(TESTED WITH WATER)

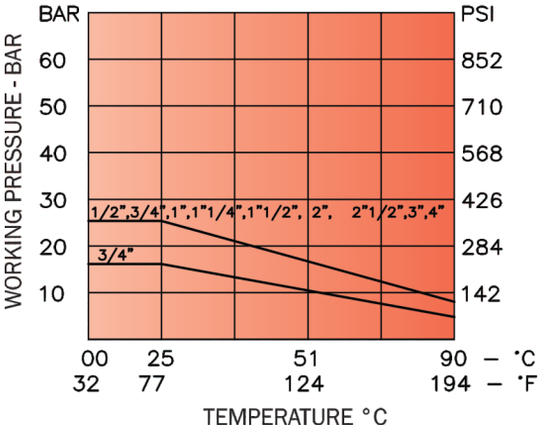

HEAD LOSS DIAGRAM
(TESTED WITH AIR)

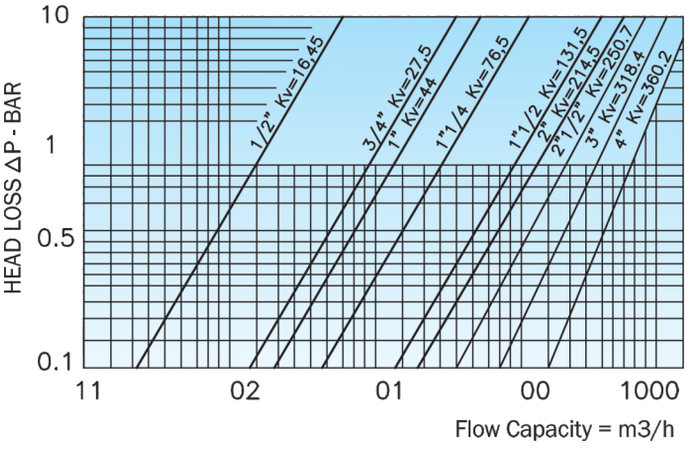

Note : The above data is subject to change without notice due to our continuing product improvement program.

PRINCIPAL FEATURES

- Screwed Female Ends to BS:21 / IS : 554.
- Full bore, Two Piece Design.
- Quarter Turn, lever operated with Low torque & stipulated leverage.
- Forged Brass rugged body construction.
- Provided with forged brass hard chrome plated ball.
- Anti blow-out stem design feature which gives further assurance against the accidental blow-out of the stem.
- Premium quality PTFE seating.
- Stainless steel (SS304) Screen Having 1mm dia perforation.
- Large screen area increases the strainer efficiency with low pressure drops.
- Extra strength of stem with high tensile brass.
- Gland less design, stem sealing by double seal O ring ensures zero leakage from the stem.
- Replaceable & virgin oil free PTFE Rings for smooth operation.
- Anti corrosive SS / Brass Stem Nut provided for trouble free operation of the Lever.
- Aluminium Lever avoids rusting of the lever in corrosive environment.
- Position indication of open / close embossed on the lever.

SUITABLE FOR

Water	Oil	Air	Gases
✓		✓	

END CONNECTION

- Screwed Female BSP Parallel Threads.

UTILISATION & SERVICE

- "LEADER" Forged Brass Ball Valve with strainer are suitable for treated fresh water & air.

WORKING PRESSURE

- Maximum Working Pressure: 20 Bar.
- See Pressure / Temperature Diagram.

TEMPERATURE LIMITS

- Maximum working temperature: 100°C.
- See Pressure / Temperature Diagram.

PRESSURE RATING: PN-20

TEST PRESSURE (Hydrostatic)

BODY	SEAT
30 Bar	22 Bar

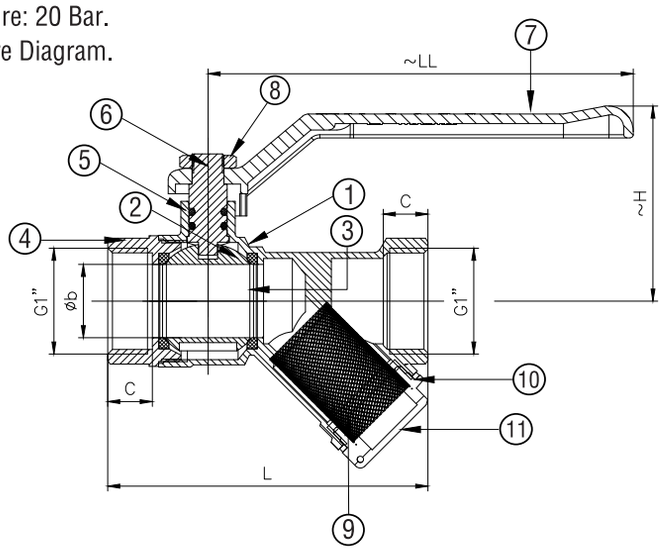

DIMENSIONAL DATA

SIZE (mm)	15	20	25	32	40	50
L	80	92.5	100.5	127.5	149.5	179.5
Øb	14	18	23	30	37	49
~H	50	53	61.2	74.8	81.5	102.7
~LL	120	133.5	133.5	160	160	200
G1	1/2"	3/4"	1"	1-1/4"	1-1/2"	2"
C	12.5	12.5	14	17	17	18.5
Item Code	FLB285	FLB285	FLB285	FLB285	FLB285	FLB285

MATERIAL SPECIFICATION

P.No.	NAME OF PART	MATERIAL	SPECIFICATION
1	BODY	FORGED BRASS	DIN EN 12156 Gr. CW617N
2	BALL	BRASS CHROME PLATED	DIN EN 12156 Gr. CW617N
3	SEAT	PTFE	—
4	BONNET	FORGED BRASS	DIN EN 12156 Gr. CW617N
5	'O' RING	RUBBER	—
6	STEM	HIGH TENSILE BRASS	IS 6912 Gr. FHTB1
7	LEVER	ALUMINIUM	POWDER COATED
8	NUT	BRASS / STAINLESS STEEL	
9	SCREEN	STAINLESS STEEL	(TYPE 304) Ø1mm PERFORATION
10	GASKET	PTFE	—
11	CAP	FORGED BRASS	DIN EN 12156 Gr. CW617N

Note : The above data is subject to change without notice due to our continuing product improvement program.