FORGED BRASS DOUBLE REGULATING BALANCING VALVE

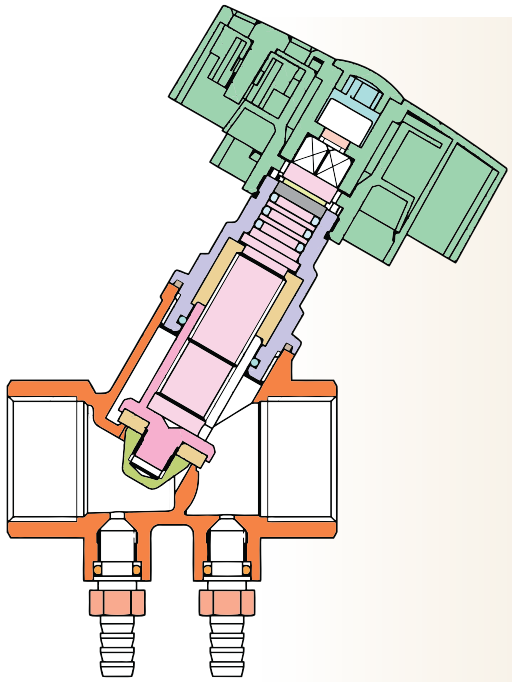

DIGITAL HAND WHEEL	13	CONNECTOR	1
HEXAGONAL CYLINDRICAL	14	O-RING	2
HEAD SNAIL		VALVE BODY	3
TRIM	15	FAUCET SPOOL	4
		GASKET	5
		VALVE CORE	6
		O-RING	7
		GASKET	8
		BONNET	9
		VALVE STEM	10
		O-RING	11
		SPLIT-WASHER	12

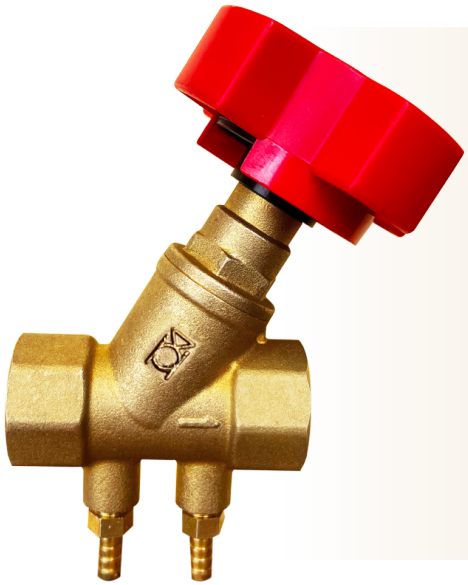

- **Item Code:** FLB275
- **Pressure Rating:** PN-16
- **Testing Standard:** BS 7350
- **Size Range:** 20mm to 50mm
- **Product Standard:** Confirms to BS 7350

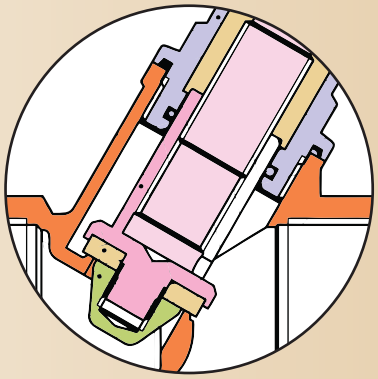

PRESSURE/TEMPERATURE DIAGRAM

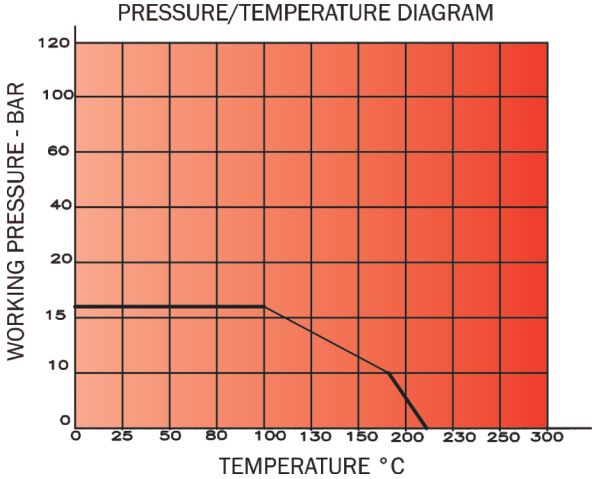

STATIC LOCK BALANCE VALVE FLOW CHARACTERISTICS

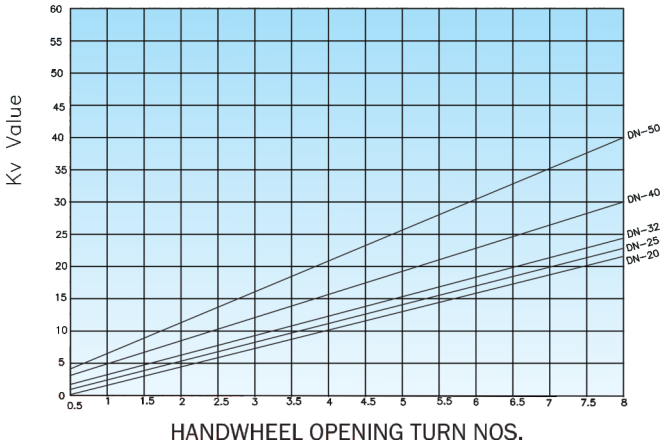

Note : The above data is subject to change without notice due to our continuing product improvement program.

LEADER VALVES LIMITED

PRINCIPAL FEATURES

- Tested according to BS:7350.
- Oblique Seat offer precise regulation and a resistance lower than the valve with a straight seat.
- Head losses are small, which for a same DN leads to more important flows than those borne by a straight seal valve.
- Tolerance on nominal Kv for fully open valve + 10%.
- Provided with mounted test points (1/4" female thread).
- Positive shot off achieved by PTFE seal / Disc.
- Tamper proof setting.
- Screwed female end as per IS 554 / BS 21.

END CONNECTION

- Screwed Female BSP parallel threads.

UTILISATION & SERVICE

- "LEADER" Forged Brass Double Regulating Balancing Valve are Suitable for HVAC Application of Water, Ethylene, Glyol Mixture (Hydronic System).

WORKING PRESSURE

- Maximum Working Pressure: 16 Bar.
- See Pressure / Temperature Diagram.

TEMPERATURE LIMITS

- Maximum working temperature: (-) 20°C to (+) 120°C.
- See Pressure / Temperature Diagram.

PRESSURE RATING: PN-16

TEST PRESSURE (Hydrostatic)	
BODY	SEAT
24 Bar (Hyd.)	17.6 Bar (Hyd.)

SUITABLE FOR

Water	Ethylene	Glyol Mixture (Hydronic System)
✓	✓	✓

DIMENSIONAL DATA

SIZE (mm)	20	25	32	40	50
ØHW	69.5	69.5	69.5	69.5	69.5
H	95	97.6	107.1	122.2	130.6
L	69	79	95	100	117
Item Code	FLB275	FLB275	FLB275	FLB275	FLB275

STANDARD MATERIAL COMBINATION

P.No.	DESCRIPTION	MATERIALS
1	CONNECTOR	FORGED BRASS
2	O-RING	EPDM
3	VALVE BODY	FORGED BRASS
4	FAUCET SPOOL	FORGED BRASS
5	GASKET	PTFE
6	VALVE CORE	FORGED BRASS
7	O-RING	EPDM
8	GASKET	PTFE
9	BONNET	FORGED BRASS
10	VALVE STEM	FORGED BRASS
11	O-RING	EPDM
12	SPLIT WASHER	SUS 304
13	DIGITAL HAND WHEEL	ABS
14	HEXAGONAL CYLINDRICAL HEAD SNAIL	FORGED BRASS
15	TRIM	ABS

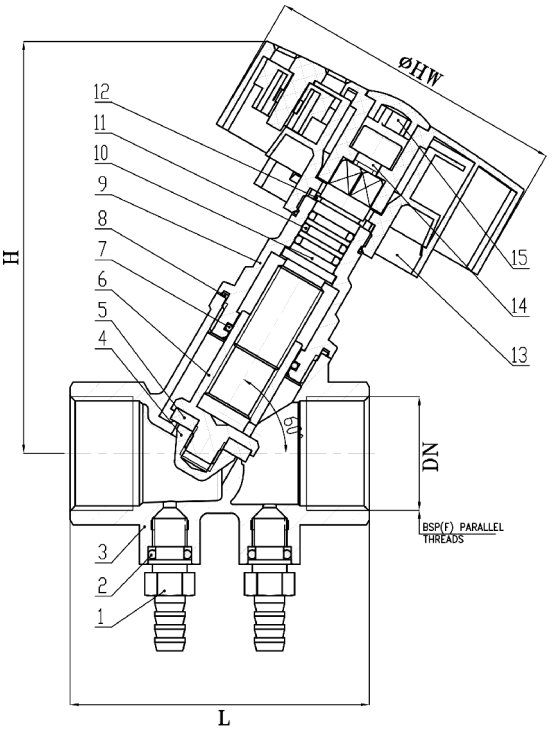

Note : The above data is subject to change without notice due to our continuing product improvement program.